STEAM LINES

NORTHERN DISTRICTS MODEL ENGINEERING SOCIETY INC.

August 2002

Inside this issue:

Your Committee

President Ron Date	9246 2835
Vice President Ian Allison	9490 2381
Secretary Andrew Manning	9446 4825
Treasurer John Martin	9448 8843
Committee Members	
Doug Baker	9341 1630
Jim Crawford Publicity & Events	9276 5464
Phil Gibbons	9390 4390
Dick Langford	9342 8049
David Naeser Safety Officer	9375 7785
Steve Reeves	9354 1395
John Shugg	9246 9549
Newsletter	
Jim Clark	9446 5870

NDMES
PO Box 681
Balcatta 6021
Western Australia

First Machine Arrives at Club House

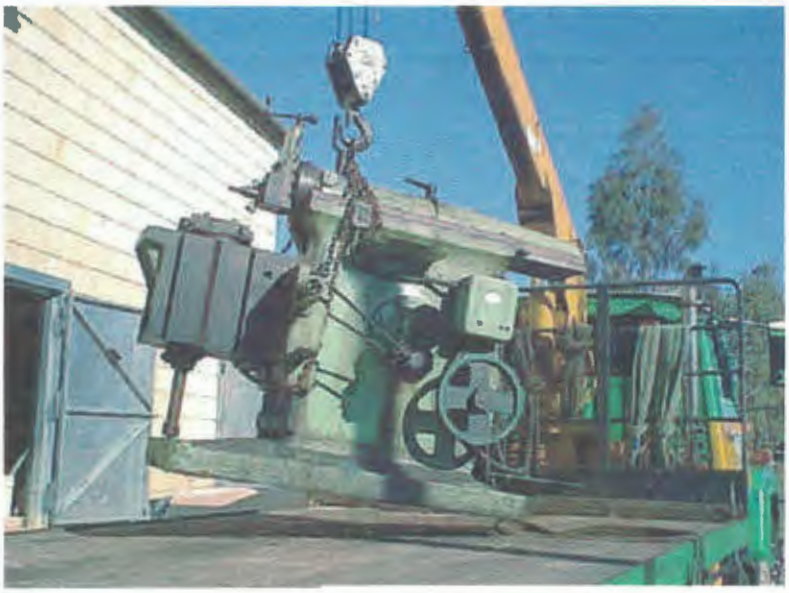

Off-loading the shaper in preparation for a few tricky moves through the doors and into the Club House workshop area.

Photo by Ray Shersby

In early July, the first piece of machinery to be delivered to the Society's new Club House — a shaper donated some time ago by Ernie Redford — was off-loaded and manoeuvred through the doors and into the ground floor workshop area.

This is one of a number of machines and other tools that will be available for member's use once the Club House and workshop facilities are completed.

Can you help us finish the Club House off? See Positions Vacant — Page 4.

CALENDAR OF EVENTS

General Meeting	Laurie Strutt Park Elvire St, Waterman	**7:30 pm**	Friday 9 August
Club Run Day and Public Run Day	Club Track Site Vasto Pl, Balcatta	11:00am–3:00 pm	Sunday 25 August
General Meeting	Laurie Strutt Park Elvire St, Waterman	**7:30 pm**	Friday 13 September
Club Run Day and Public Run Day	Club Track Site Vasto Pl, Balcatta	11:00am–3:00 pm	Sunday 29 September
Annual General Meeting	Laurie Strutt Park Elvire St, Waterman	**7:30 pm**	**Friday 11 October**
Club Run Day and Public Run Day	Club Track Site Vasto Pl, Balcatta	11:00am–3:00 pm	Sunday 27 October

Note: General Meetings now start at **7:30 pm**.
Run Days — Grounds open to the public at 10:00 am, running starts at 11:00 am.

July General Meeting

minutes of meeting by Andrew Manning

The July General Meeting opened with 21 members and no visitors present. New members **Allan Mathie** and **Terry Kain** were welcomed to the Society.

MATTERS ARISING FROM MINUTES — President **Ron Date** gave a brief rundown on the discussions held during the last Committee Meeting regarding the operation of both the existing elevated track and the proposed ground level (GL) track and the required signalling.

There was quite some discussion on the hazards of running the elevated and GL tracks in counter directions and various alternatives to mitigate or remove hazards. No firm resolutions were arrived at. The President stated that there was no real urgency as the GL track was still some years off.

A working group has been established to develop a signalling system for the existing elevated track with due regard to the future GL track. It is planned to have a trial system in place by the July run day.

Proposals were received for naming of the new building: **Clive Chapman** proposed that the building be named after the last serving WA Railways steam engineer, believed to be S. Mills. Seconded by Steve Reeves. **Andrew Manning** proposed the name be of a famous general engineer like Brunel or Stevenson. Better if it were an Australian engineer. **Jim Clark** proposed that we simply named the building the "NDMES Building", seconded Steve Briggs.

It was agreed that we should continue to accept nominations for the building name and publish same for a little while yet.

BUILDING REPORT — Widows are going in at present. Ready to fit flooring and installation of cabling for power is progressing. Looking for members with carpentry/joinery experience to finish windows and help with flooring — see Situations Vacant.

Ron Date wished to recognise the efforts of the Senior retiree group who regularly spend time and effort on the building- **John Shugg, Tony Jones, John Hudson,** and **Ray Shersby.**

Ron Date also went on the say there was a need for other members to get involved with the maintenance of the grounds. The grounds are generally getting overgrown and will be a significant fire risk next summer. There is a need to clean up the back of the block, as it is quite an eyesore.

GENERAL BUSINESS — At the last committee meeting it was agreed that there were not adequate guidelines and protocols in place for the acceptance of new members, i.e. the criteria for accepting a new member's application, how they are actually elected, a joining fee, should prospective members application sit for a couple of months, and so on. The matter will be discussed in detail at the next General Meeting.

Ron Date stated that there is a need to improve the conduct of meetings. He plans to obtain a guide to conduct of meetings and will propose a set of rules for adoption by the Society.

Although members may attend committee meetings for a specific purpose, attendance needs to be managed to ensure that necessary management business is dealt with. Andrew Manning proposed **'Members wishing to attend a Committee Meeting to address a specific agenda item must request approval to attend from the Secretary or President in advance."** Seconded John Shugg and carried by the meeting.

Steve Reeves proposed that the Society support the Bunbury society in celebrating its 20th Anniversary by attending as a group. The celebrations are on the weekend of 16/17 November.

Andrew Manning noted that the Society needs to arrive at an appropriate process for recognising and thanking organisations and/or individuals for their support of the Society. Special rundays, passes for public run days, etc. were suggested. This also lead to a brief discussion on the extent we should allow free entry to family members. No decisions were made.

Dennis Lord stated that until recent discussions he was unaware that there was a speed limit on the Society track. Jim Clark is to publish details of Society safety rules in future issues of Steamlines.

MODEL ENGINEERING — **Jim Clark** discussed some of the techniques used to finish his Britannia. He had the tender on show. Jim paints items as they are completed, using Wattyl spray cans of epoxy paint, which take some weeks to fully harden. He uses paint in drafting pens for lining, and produces his own transfers on a PC, printing them out onto Tee shirt "iron on" material using normal ink-jet printer inks. These are ironed onto the painted surface, however the use of clear lacquer over the top may cause crazing of transfer.

Steve Reeves showed his loco 'Helen' stripped down to its chassis – we were able to see the extent of the fabricated components including the cylinders.

Milton Smith showed a small brass box to house loco light switches.

RAFFLE — there was no raffle drawn this meeting.

Andrew Manning

Patrick Dick's Musings To Questions...

Dear Patrick

I am building a six-coupled wheel locomotive and I am very apprehensive about machining the axle boxes. Would you please explain to me a method how I would do this.

Your obedient servant,
Coruthers.

Dear Coruthers,

There are many different methods that have been used and written about. LBSC, Martin Evans, Dick Symonds and Ken Swan, just to mention a few, all claim they have the answer, but Coruthers, in my opinion they are all wrong.

The very first thing one does if you are wanting to machine axle boxes is to machine the coupling side rod rods first. I know what you are thinking, what have I been smoking but trust me, I'm correct. Before I go on with this any further I will have to stop and have a cup of tea and a lavvy stop, so I will give you three minutes to pour a drink and put your feet up.

There, that didn't take long, and now you can concentrate. By machining the side rods first, and in pairs, the bores for the journals are machined to size. Let's say the journal outside diameter is .562" ($^9/_{16}$").

When the side rods are finished you can use them as a jig to bore the holes in the axle boxes. Don't be too hasty to judge, just because LBSC didn't do it this way doesn't mean it is wrong. After the side rods are finished, you need to make three toolmaker's buttons that are the same diameter as the hole in the side rod.

When this is done, mark out the first axle box on both sides of the frames. This statement assumes that the boxes are clamped against the keeper. The marking out of this position is very important, as the frames must be clamped against an angle plate and vertically square.

If you are building a 7¼" gauge engine you will probably find this impractical, but the principle remains the same.

When the first axle box is marked out, drill and tap a hole and affix the toolmaker's button in the correct position. I didn't mention that the preferred method of marking out is a square the same diameter as the button, i.e. $^9/_{16}$".

Return the box to the frames and offer the first rod up to the button. Swing the rod into the second box (the middle one) and align the rod to be parallel to the frame. When you are satisfied that all is kosher, mark this centre by scribing a circle thorough the journal hole. Remove the box and centre punch as close to the centre as possible. When done, drill and tap a hole at this centre.

Replace the box and offer the button up through the journal hole and screw it tight in position. The last box is done exactly the same. Now you have three axle boxes complete with buttons aligned to the centres of the side rods.

The next operation requires little explanation other than to say set the box up in the four-jaw chuck and clock the button until it is running perfectly true. Remove the button and drill and bore the hole to size. If you must use a reamer, remove no more than 5 thou. to the finish diameter. DO NOT DRILL AND REAM THE HOLE. It is essential that the hole is bored using a single point-boring tool. Now this side is done, the other side is machined in exactly the same way.

I hope that answers you question as I have just finished my cuppa, but perhaps some one dse may have pet method they will tell us about.

Regards to you and I am pleased to hear that you are an obedient servant,

Patrick Dicks

The Menere Steam Motorcycle...

Ian Morrison of Bunbury has sent in a copy of an interesting article from a publication called Classic Motorcycling — No.15.

This describes a Melbourne man, George Menere, who developed a steam powered motorcycle in the 1890s. He adapted a model stationary engine to fit his bicycle, and after a few attempts (increasing the size of the cylinder to provide more power to overcome the increased weight of the bicycle!), he succeeded in obtaining a reasonably reliable steam motorcycle with a range of about 5 miles between water stops.

It ran on a kerosene burner with a coiled tube boiler producing 'flash' steam, and was apparently in regular use by George Menere for some years until about 1905.

During the war the old motorcycle was stripped and the steam engine converted for use in a boat, to overcome petrol rationing, where it has been preserved until now.

As there are copyright issues involved in reproducing the actual article and associated photos in Steamlines, those of you who are interested can obtain full details of the article by contacting the Editor — Jim Clark.

PERTH
N.D.M.E.S.
W A

Northern Districts Model Engineering Society Inc.

Track Site:-
Vasto Place
Balcatta
Western Australia

All correspondence to:-
PO Box 681
Balcatta
Western Australia 6021

http://www4.tpg.com.au/users/jimclark

A Visit to Yarloop Workshops

by Jim Clark

The old Millars workshops at Yarloop make an interesting day out, especially on those few days a year when the preserved machines are in steam. Perfect on a wet winter's day!

The site has an extensive complex of buildings and workshops, dating from 1901, which were developed to service the whole of the Millars company timber felling, sawing and transportation operations..

Millars operated a large private railway network between their many mills in the South West. All the locos were serviced and prepared at Yarloop Workshops, and many of the parts were manufactured on site. A saw shop sharpened and set the circular saws and huge bandsaws used in the mills. The pattern store and main store still remain much as they must have been 50 or more years ago, complete with various dusty items still "in stock" on some of the shelves.

The jewels in the crown, for model engineers anyway, would have to be the collection of lovingly restored stationary steam engines in the steam shed. These are a mixture of different types and vintages, all rescued from various parts of the state, and are powered from a couple of vertical wood fired boilers. They are run in rotation during the live steam day, so there's plenty of action to see. There are also demonstrations of steam sawing and log handling.

For more information, call the Yarloop Caretaker: 9733 5368.

Above: Twin cylinder steam winch of marine origin.
Below: The largest engine, a twin cylinder 350hp Austral Otis, the main engine at Dean Mill 1910-1979.

Above: There are regular demonstrations of log sawing using this steam reciprocating saw and a steam winch to bring the logs up to the saw.

All Photos by Jim Clark

POSITIONS VACANT

Electricians/Plumbers — Fit-out of the new building is continuing, and we desperately need people with the above trade skills.

Multi-skilled People — Lots of other work also needs to be done on the interior of the building, you would surely have a skill that's in need—carpentry, painting, fitting, joining, whatever...

Contact Ron Date for more details, or just come on down to the track site.

FOR SALE

5" Gauge NSWGR C36 Class 4-6-0 — rolling chassis. Front bogie, crank pins, complete set of castings for engine & tender, plans, flame cut tender bogie side frames. $1,500 ono. (about the price of castings only!) Contact Ian Morrison (Bunbury) on 9721 2034.

Milling Machine — near new. For more details, please contact Keith on 9354 2549.

© 2002 Northern Districts Model Engineering Society Inc.

The V-8 steam locomotive Nos .19.1001

by Doug Baker

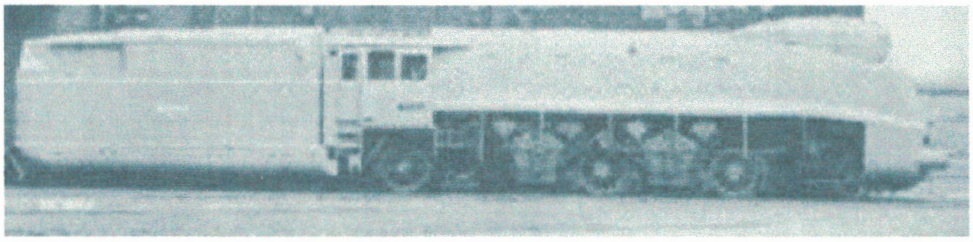

During the period when the steam locomotives were king of the track , Chief Mechanical Engineers experimented with refining concepts in an effort to have an edge over the ir competitor s. I also have to assume that like today , the infrastr ucture of the company was being constantly reviewed on how to return a better dividend to the share holder s and the executi ves. It was therefore the CME's goal to introduce cost effective procedures that would satisfy the expectations of the Board .

It was also around this time the magic 100mph had been achieved and while most prominent railway companies boasted that status , all the locomotives were in essence following the same principle design - a reciprocating piston that transferred energy to the wheels through a massive array of steel that was for ever changing direction , that soaked up kinetic energy at an unprecedented rate.

This phenomenon was obviously well known by all Engineers of the time, but the level of information and technolog y available limited progress . Consequently the problem was accepted by most as insurmountable. In an effort to transport superior tonnages of freight than the competitor s, the locomotive design manufacture rs simply built bigger and bigger engines. It is fair to say there were some serious modifications done with valve and port design, compounding , blasts pipes, Aluminium side rods, roller bearings and so on , but in essence nothing had changed since ma n had climbed out of the primeva l slime with his train set.

What was needed was a tota l rethink of the whole industry - a concept that Louis Carroll may imagine . A couple of lateral thinking CME s devised steam turbine driven locomotives but these were not successful for a lot of reasons. The bo iler pressure had to b e elevated to extremely high pressure and that in it self created a problem . The concept may have been on the correct path but once again the technology of the day made the project unworkable. I believe if they had used the turbines to drive generators t hat in tu rn drove traction engines , the advent of the diesel powered locomotive may have been stemmed.

While this was all going on , a German designer , Fredrick Whitte , who was in charge of testing and developing for the Deutche Reichsbahn , conceived a conc ept for a steam locomotive the world had never seen before. This steam locomotive was a total rethink of the technology and the result was a V-8 steam locomotive.

The concept was first discussed by Fredrick Whitte with the Deutche Reichsbahn in 1933 , foll owed by a proposal in 1934 and subsequently designing commenced in 1935. The detail drawings and design was carried out by Richard Roosen of Henschel and Son. The Henschel and Son Railway Company produced a huge number of steam locomotives at the time. Owing t o their expertise with the steam loco, and the politics of the country , I suspect there may have been little choice. I would also presume this engine , because of its revolutionary approach , was treated as a state secret.

It took approximately 6 years to de sign this locomotive and on July 7, 1941 the preliminary drawings were revealed to the Deutche Rechsbahn for review . What a day that must have been for Witte and Roosen , the design being a Mikado (2 -8-2), having finally reached this stage. I can jus t imagine t he review board study ing the drawings with accolades aplenty. Now for all to see , a locomotive that instead of sporting the usual cylinders up fron t with the associated steel work was a V-8!

The basis of this V -8 was 8 cylinders arranged in four pairs. The cylinders sets were arranged alternatively on the four driving axle s. In the section drawing you will note the pistons share the same crank as most "V" twin marine or stationary engine of this style commonly do and are at 90° to each other. But whe n one studies the valve configuration you will not e both valves are operated from the same eccentric and the eccentric seems to be controlled by a mechanism at the bottom left hand corner , probably a gear box. I assume this gear box rotated the eccentric for the cutoff, forward and reverse. I suspect the eccentric was drive n with gears , as being situated where it is illustrated it does not appear to be connected to the crank.

You will also note from the sectional drawing the wheels were designed not to have coupling rods connecting them together , overcoming the kinetic energy problem. It is my guess the axle s had chains coupling them , as I believe it would have been very difficult to exactly match each engine to be doing the same amount of work as the next. Fur ther , traction would have been a nightmare if the wheel sets were independent , as any small track misalignment would have allowed wheel slippage.

It is obvious that maintenance was one of the primary prerequisites as there is a lifting eye illustrated. To me that would assist in the removal and the installation of a replacement engi ne, minimi sing the down time. This

would have been a huge plus as a "loco in shed" cost a lot of money. I suspect the concept was to pull the faulty engine off and replace it wit h another. The very compact engine would have been easily removed for repair at the bench as the priority demanded. It has been suggested the engines would require a high level of maintenance compared to a conventional steam locomotive. While I cannot argu e one way or the other regarding this , I still believe the down time would be little.

Notwithstanding , my person al opinion is that the engines would require less maintenance as the entire engine is enclosed in a casing. This would lend the engine to have a sum p that forced oil through out the sliding faces , which are isolated from dirt and grit. The engine driver and firemen would not have to stop perio dically to lubricate the motion - in fact, I believe it would be no different to what we have come to expect with the modern motor vehicle. The bonus , of course , is provided that fuel and water are plentiful , the engine could run for long periods without stopping , reaching the destination in an economic favourable time.

When built , the locomotive was given builder's num ber s 19.1001 and like all prototypes there were initial teething problems . A pparently the piston rings did not seal correctly due to incorrect tolerances and this evidently affected the initial start . Once repaired , the rolling dynamometer test bed returned th e locomotive running at up to 125mph , and during the brake test 117mph , with very quiet running. Regrettably the locomotive didn't perform as well on the track as expected and the locomotive never exceeded the Mallard speed record of 126mph. It has been suggest ed that the conventional

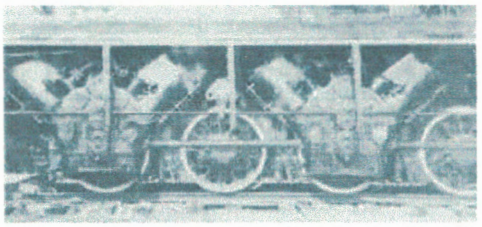

piston valves would have restricted the top speed as well as the physics of the steam coming and going through the same port. Perhaps poppet valves operating through independent ports such as some stationary engines and experimenta l locomotives used would have made a difference. Despite the suggested refinements one has to be mindful of the traditional design of Mallard , as it too had piston valves and the common ports for seam supply and exhaust.

During the hostilities of WW II in October 1944 the locomotive was badly damage during an air raid on Hambur g and was transferred to Braunschweig. In August 1945, 19.1001 was transported back to Herschel where the 757 th Railway shop battalion of t he United States Army was stationed. The engine was repaired and test run between Kasse l and Waben. After this test run the locomotive , with other captured railway equipment, was transported back to the US in October 1945. The locomotive was delivered to Fort Monro e in Virgini a where it was inspected by US government representatives in March 1946. It was then moved to Fort Patrick Henry where the engine was stripped and the various components were inspected. In 1950 the locomotive was offered back to German y at a cost of the transport , being US$15,000. Regrettably , the locomotive was finally scrapped in Fort Eusti s in 1952, a sad end to a magnificent engineering achievement

It is hard to understand why the engine was taken back to the US in the first place as diesel locomotion was now ostens ibly used and steam locomotiv es had literally hit their used -by date. Further , but more importantly , why scrap it? Why not put it in a museum? I am sure that some museum would have put it on display for posterity . To me the destruction of such a magnificent locomotive is nothing short of technological vandalism.

I believe a miniature is being built in Switzerland. The challenge now is to build a miniature to replicate the original in Australia and to see what it can do. Any takers?

Doug Baker

Credit : James D Heffner
A Forgotten Experiment

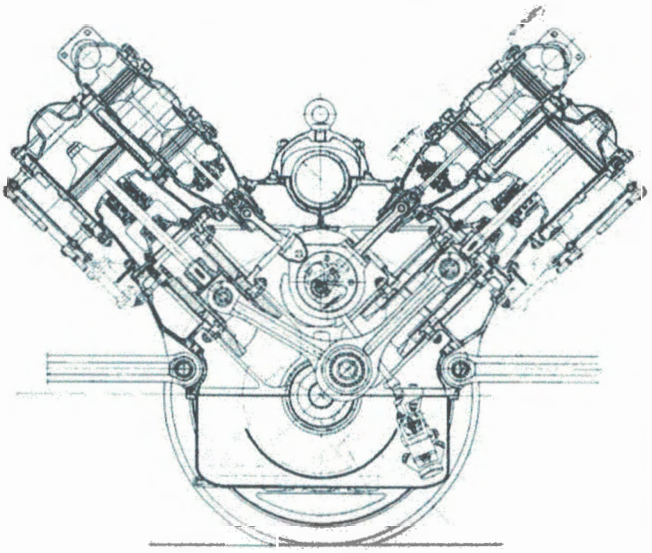

7. Henschel-Einzelachsantrieb mit V-Motor